Cut View

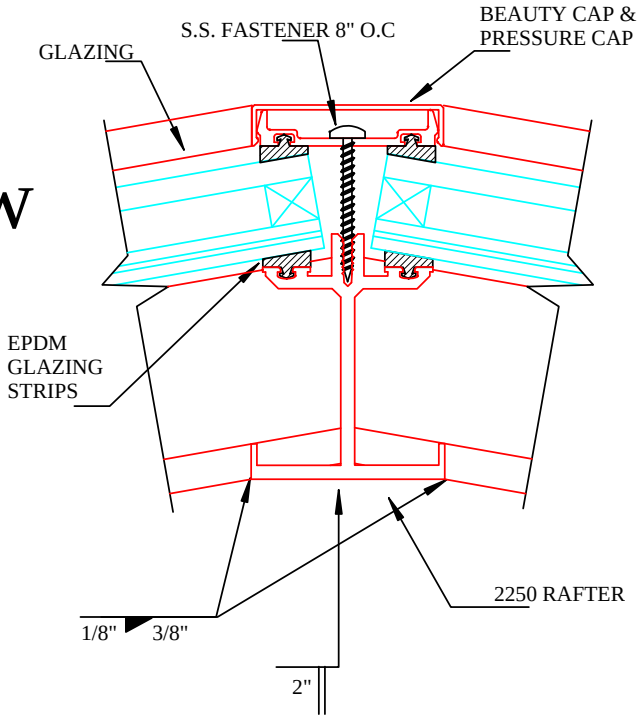

Bottom View

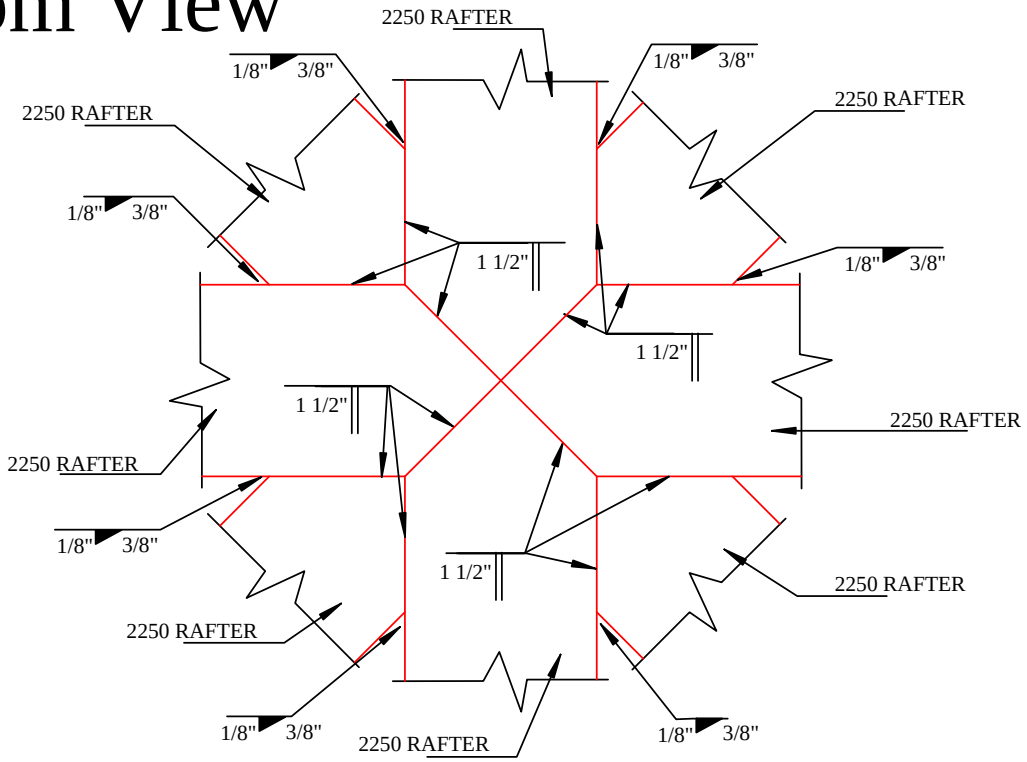

P1

2250 Apex Detail

1/2" = 1"

Sky-Tech Glazing Systems, LLC. 800-440-9999 fax : 909-606-1441

Mailing Address: 160 W. Foothill PKWY Suit 105 #212, Corona , CA 92882
Physical Address: 402 E. Princeland Court, Suite 5, Corona, CA 92879

E-mail: info@sky-techglazing.com
Visit Us At www.sky-techglazing.com